Current part is item (2) on diagram. Available at www.oshkoshequipment.com

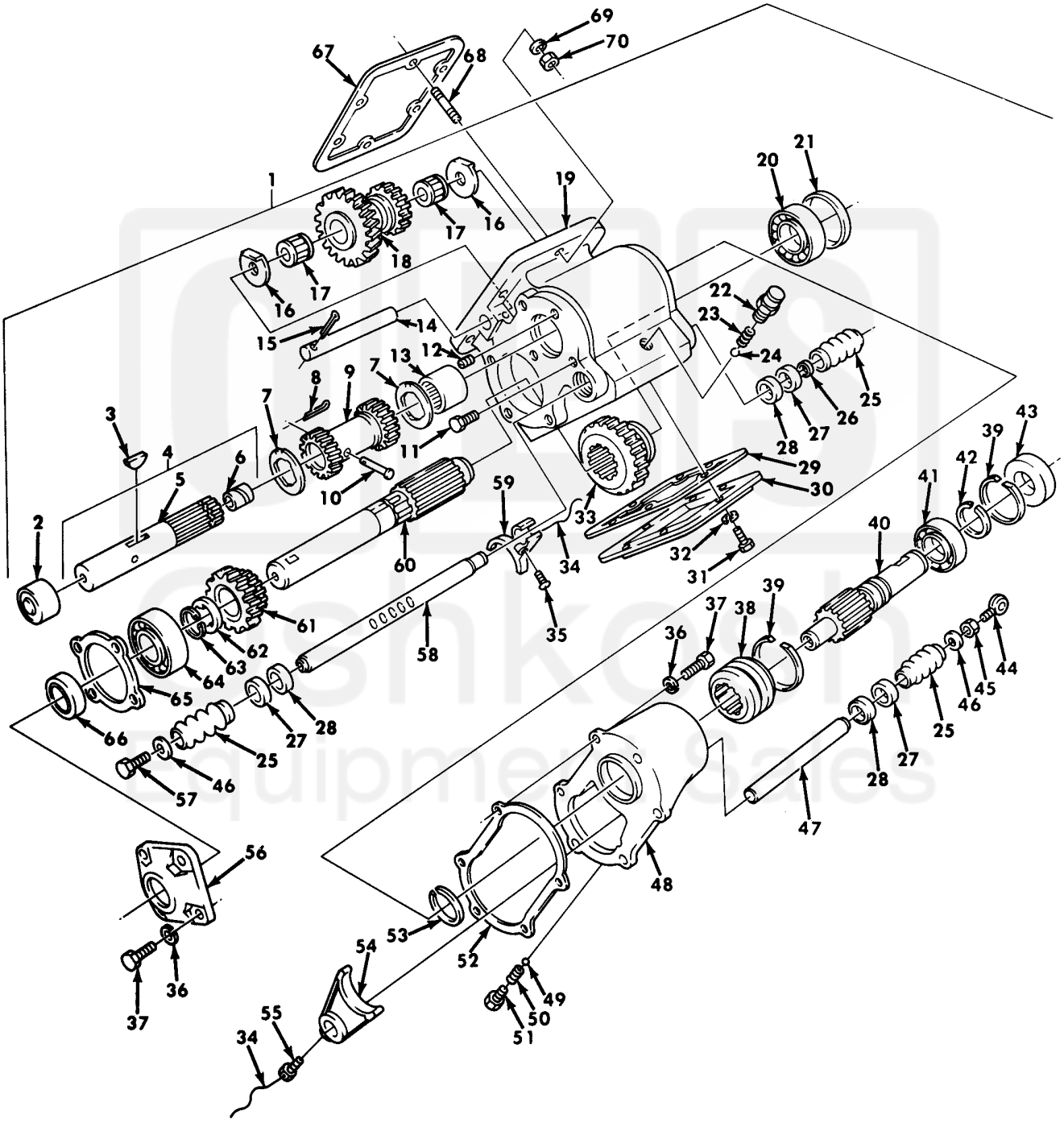

Figure 418. Transmission Power Takeoff Assembly and Mounting Hardware.

Current part is item (2) on diagram. Available at www.oshkoshequipment.com

Current part is item (2) on diagram. Available at www.oshkoshequipment.com

(1) ITEM NO	(2) SMR CODE	(3) NSN	(4) CAGEC	(5) PART NUMBER	(6) DESCRIPTION AND USABLE ON CODE (UOC)	(7) QTY
					GROUP 2004 POWER TAKEOFF ASSEMBLY	
					FIG. 418 TRANSMISSION POWER TAKEOFF ASSEMBLY AND MOUNTING HARDWARE	
1	PAFFF	2520-00-740-9589	19207	7409589	POWER TAKEOFF,TRANS..... UOC:620,627,633	1
2	PAFZZ	3110-00-183-6723	24617	713421	.BEARING..... UOC:620,627,633	1
3	PAFZZ	5315-00-058-8581	96906	MS35756-109	.KEY,WOODRUFF..... UOC:620,627,633	1
4	PAFZZ	2520-00-740-9594	19207	7409594	.SHAFT REVERSE GEAR..... UOC:620,627,633	1
5	XAFZZ		19207	10900574	..SHAFT..... UOC:620,627,633	1
6	PAFZZ	3120-00-737-3115	19207	7373115	..BEARING,SLEEVE..... UOC:620,627,633	1
7	PAFZZ	5310-00-706-1281	19207	7061281	.WASHER,THRUST..... UOC:620,627,633	2
8	PAFZZ	5315-00-839-2326	96906	MS24665-281	.PIN,COTTER..... UOC:620,627,633	1
9	PAFZZ	2520-00-740-9587	19207	7409587	.GEAR REVERSE SHAFT..... UOC:620,627,633	1
10	PAFZZ	5315-01-208-5492	19207	8728251	.PIN,STRAIGHT,HEADED..... UOC:620,627,633	1
11	PAFZZ	5306-00-226-4822	80204	B1821BH031C050N	.BOLT,MACHINE..... UOC:620,627,633	2
12	PAFZZ	4730-00-018-9566	81348	WW-P-471ACABCA	.PLUG,PIPE..... UOC:620,627,633	1
13	PAFZZ	3110-00-183-6723	96906	MS17131-35	.BEARING,ROLLER,NEED..... UOC:620,627,633	1
14	PAFZZ	3040-00-706-1266	95019	9P21	.SHAFT,SHOULDERED..... UOC:620,627,633	1
15	PAFZZ	5315-00-013-7258	96906	MS24665-497	.PIN,COTTER..... UOC:620,627,633	1
16	PAFZZ	5310-00-753-8656	19207	7538656	.WASHER,KEY..... UOC:620,627,633	2
17	PAFZZ	3110-00-227-3074	19207	7538658	.BEARING,ROLLER,JOUR..... UOC:620,627,633	2
18	PAFZZ	3020-00-740-9586	19207	7409586	.GEAR CLUSTER..... UOC:620,627,633	1
19	PFFZZ	2520-00-706-1160	19207	7061160	.CASE NAME PLATE..... UOC:620,627,633	1
20	PAFZZ	3110-00-100-3119	60038	700080	.CONE AND ROLLERS,TA..... UOC:620,627,633	1
21	PAFZZ	2520-00-706-1265	19207	7061265	.SPACER POWER TAKE O..... UOC:620,627,633	1
22	PAFZZ	2520-00-104-4603	19207	5226140	.RETAINER,SHIFTER SH..... UOC:620,627,633	1
23	PAFZZ	5360-00-692-6128	19207	8331558	.SPRING,HELICAL,COMP..... UOC:620,627,633	1
24	PAFZZ	3110-00-100-6158	96906	MS19059-2422	.BALL,BEARING..... UOC:620,627,633	1
25	PAOZZ	9390-00-706-1278	19207	7061278	.BELLOWS,PROTECTION..... UOC:620,627,633	3
26	PAOZZ	5310-00-740-9595	19207	7409595	.WASHER,FLAT..... UOC:620,627,633	1
27	PAOZZ	5330-00-737-6534	19207	7376534	.RETAINER,PACKING..... UOC:620,627,633	3
28	PAFZZ	5330-01-143-1211	19207	7061272	.SEAL,PLAIN ENCASED..... UOC:620,627,633	3
29	PAFZZ	5330-00-234-3317	19207	8327322	.GASKET..... UOC:620,627,633	1

Current part is item (2) on diagram. Available at www.oshkoshequipment.com

Current part is item (2) on diagram. Available at www.oshkoshequipment.com

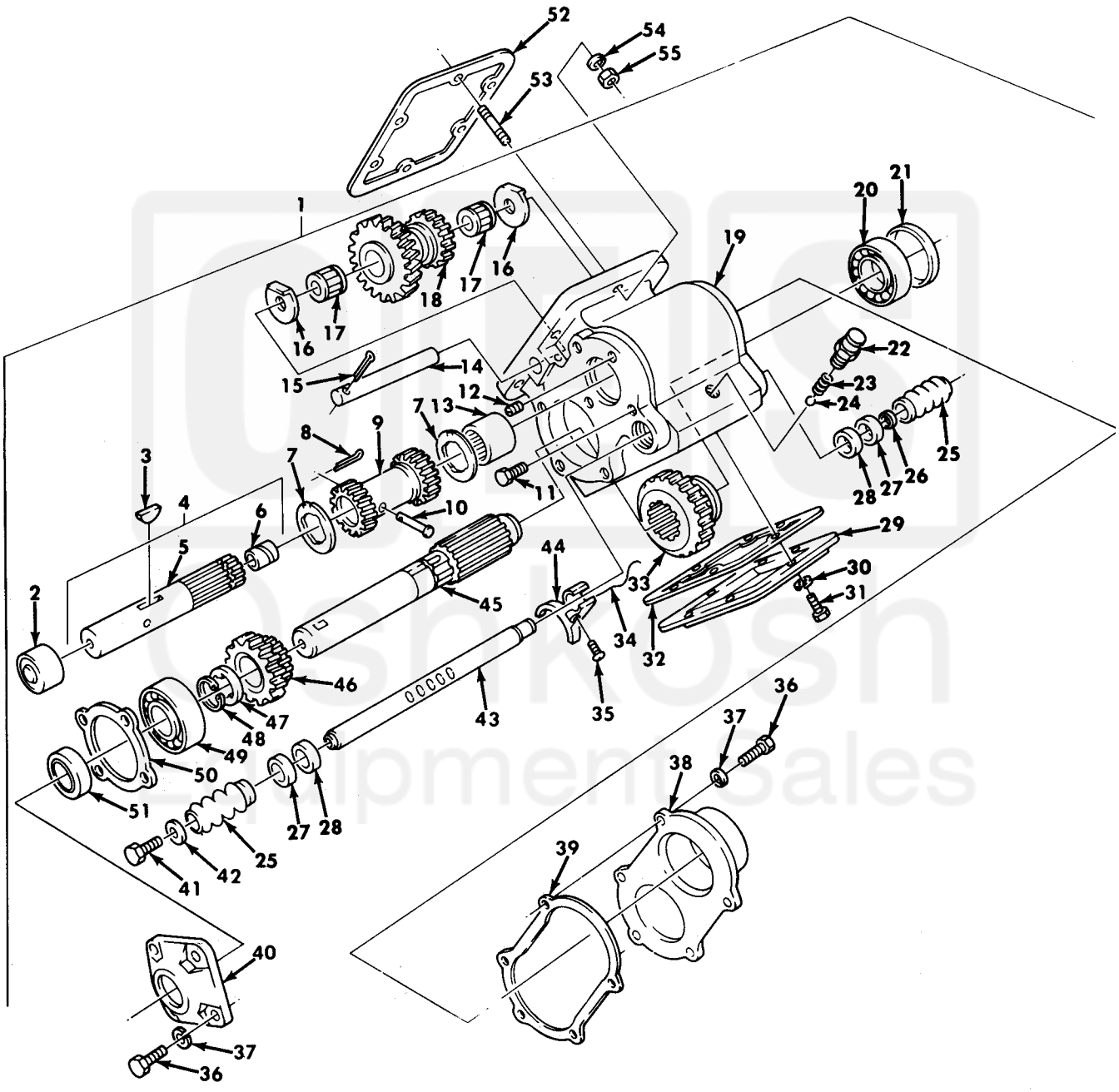

Figure 419. Transmission Power Takeoff Assembly and Mounting Hardware.

Current part is item (2) on diagram. Available at www.oshkoshequipment.com

Current part is item (2) on diagram. Available at www.oshkoshequipment.com

(1) ITEM NO	(2) SMR CODE	(3) NSN	(4) CAGEC	(5) PART NUMBER	(6) DESCRIPTION AND USABLE ON CODE (UOC)	(7) QTY
					GROUP 2004 POWER TAKEOFF ASSEMBLY	
					FIG. 419 TRANSMISSION POWER TAKEOFF ASSEMBLY AND MOUNTING HARDWARE	
1	PGFFH	2520-00-740-9588	19207	7409588	POWER TAKEOFF,TRANS..... UOC:614,621,622,623,625,628,634,637	1
2	PAFZZ	3110-00-183-6723	96906	MS17131-35	.BEARING,ROLLER,NEED..... UOC:614,621,622,623,625,628,634,637	1
3	PAFZZ	5315-00-058-8581	96906	MS35756-109	.KEY,WOODRUFF..... UOC:614,621,622,623,625,628,634,637	1
4	PAFZZ	2520-00-740-9594	19207	7409594	.SHAFT REVERSE GEAR..... UOC:614,621,622,623,625,628,634,637	1
5	XAFZZ		19207	10900574	..SHAFT..... UOC:614,621,622,623,625,628,634,637	1
6	PAFZZ	3120-00-737-3115	19207	7373115	..BEARING,SLEEVE..... UOC:614,621,622,623,625,628,634,637	1
7	PAFZZ	5310-00-706-1281	19207	7061281	.WASHER,THRUST..... UOC:614,621,622,623,625,628,634,637	2
8	PAFZZ	5315-00-839-2326	96906	MS24665-281	.PIN,COTTER..... UOC:614,621,622,623,625,628,634,637	1
9	PAFZZ	2520-00-740-9587	19207	7409587	.GEAR REVERSE SHAFT..... UOC:614,621,622,623,625,628,634,637	1
10	PAFZZ	5315-01-208-5492	19207	8728251	.PIN,STRAIGHT,HEADED..... UOC:614,621,622,623,625,628,634,637	1
11	PAFZZ	5306-00-226-4822	80204	B1821BH031C050N	.BOLT,MACHINE..... UOC:614,621,622,623,625,628,634,637	2
12	PAFZZ	4730-00-018-9566	81348	WW-P-471ACABCA	.PLUG,PIPE..... UOC:614,621,622,623,625,628,634,637	1
13	PAFZZ	3110-00-183-6723	96906	MS17131-35	.BEARING,ROLLER,NEED..... UOC:614,621,622,623,625,628,634,637	1
14	PAFZZ	3040-00-706-1266	95019	9P21	.SHAFT,SHOULDERED..... UOC:614,621,622,623,625,628,634,637	1
15	PAFZZ	5315-00-013-7258	96906	MS24665-497	.PIN,COTTER..... UOC:614,621,622,623,625,628,634,637	1
16	PAFZZ	5310-00-753-8656	19207	7538656	.WASHER,KEY..... UOC:614,621,622,623,625,628,634,637	2
17	PAFZZ	3110-00-227-3074	19207	7538658	.BEARING,ROLLER,JOUR..... UOC:614,621,622,623,625,628,634,637	2
18	PAFZZ	3020-00-740-9586	19207	7409586	.GEAR CLUSTER..... UOC:614,621,622,623,625,628,634,637	1
19	PFFZZ	2520-00-706-1160	19207	7061160	.CASE NAME PLATE..... UOC:614,621,622,623,625,628,634,637	1
20	PAFZZ	3110-00-100-3119	60038	7000-80	.CONE AND ROLLERS,TA..... UOC:614,621,622,623,625,628,634,637	1
21	PAFZZ	2520-00-706-1265	19207	7061265	.SPACER POWER TAKE O..... UOC:614,621,622,623,625,628,634,637	1
22	PAFZZ	2520-00-104-4603	19207	5226140	.RETAINER,SHIFTER SH..... UOC:614,621,622,623,625,628,634,637	1
23	PAFZZ	5360-00-692-6128	19207	8331558	.SPRING,HELICAL,COMP..... UOC:614,621,622,623,625,628,634,637	1
24	PAFZZ	3110-00-100-6158	96906	MS19059-2422	.BALL,BEARING..... UOC:614,621,622,623,625,628,634,637	1
25	PAFZZ	9390-00-706-1278	19207	7061278	.BELLOWS,PROTECTION..... UOC:614,621,622,623,625,628,634,637	2
26	PAFZZ	5310-00-740-9595	19207	7409595	.WASHER,FLAT..... UOC:614,621,622,623,625,628,634,637	1
27	PAFZZ	5330-00-737-6534	19207	7376534	.RETAINER,PACKING..... UOC:614,621,622,623,625,628,634,637	2
28	PAFZZ	5330-01-143-1211	19207	7061272	.SEAL,PLAIN ENCASED..... UOC:614,621,622,623,625,628,634,637	2
29	PAFZZ	5340-00-354-0771	19207	5323473	.COVER,ACCESS..... UOC:614,621,622,623,625,628,634,637	1

Current part is item (2) on diagram. Available at www.oshkoshequipment.com